V - Measurement of power, flow and temperature

Measurement of force :-

Force is a basic engineering parameter. Force measurement is important in many engineering applications such as weighing of an object, dynamics of vehicles, vibration studies.

*) Direct method

*) In Direct method

Direct method :-

It involves a direct comparison with a known gravitational force on a standard mass, say by a balance.

Equal arm balance :-

Equal arm balance is the most simple force measurement. The basic principle of

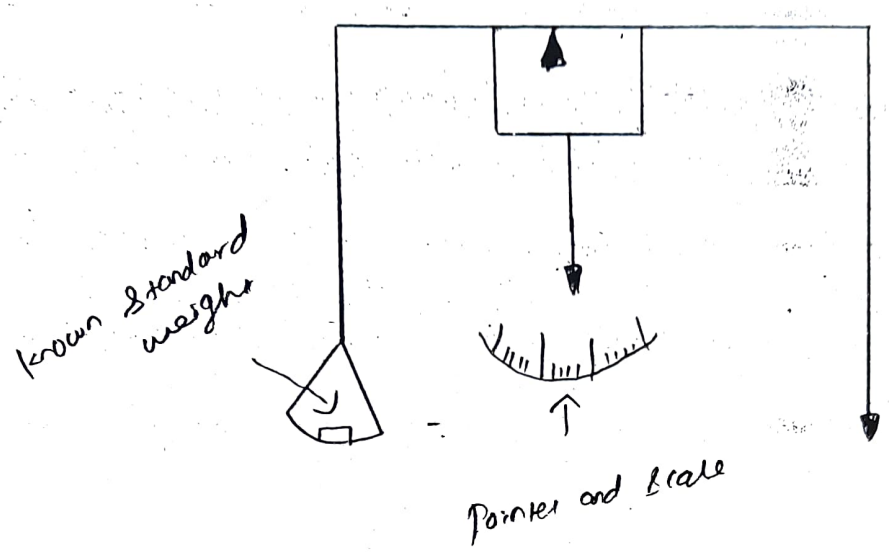

Beam balance.

The system consist of beam pivoted on a knife edge fulcrum placed exactly at the centre of the beam as shown in figure. When the unknown force is applied at one end of the beam, the mass on the other end of the beam balances the unknown force. The pointer is attached to the centre of the beam.

Indirect Methods of Force Measurement:-

Accelerometers:-

A force will make a body to accelerate. By measuring the acceleration, the force may be determined from the equation $F = ma$

where m is the mass of the body.

To measure acceleration, accelerometers are used.

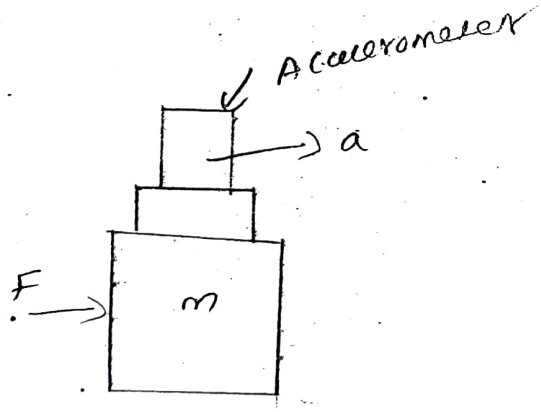

Force measurement by acceleration

Hydraulic and pneumatic load cell:-

A load cell is an electro-mechanical transducer that converts load / forcing acting into an analog electrical signal.

Hydraulic load cell:-

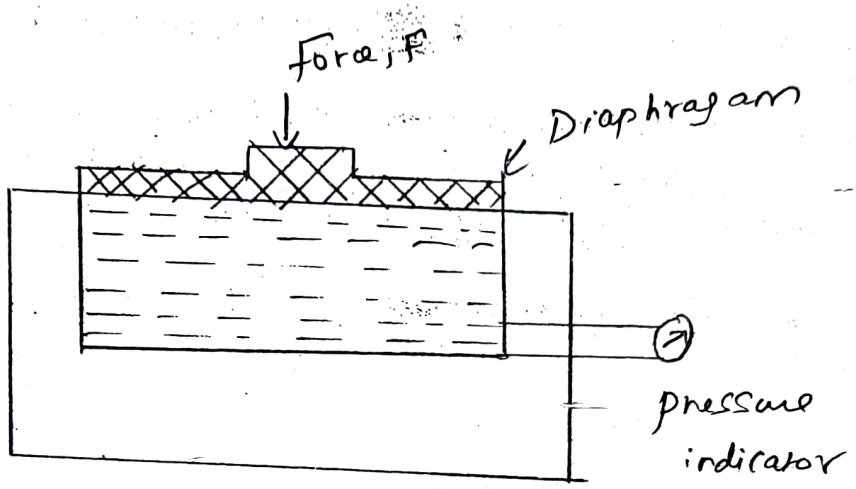

Hydraulic load cell

Mechanical Stops are used to prevent the over Strain of the diaphragam when the load exceeds the certain limit. The load cell is completely filled with the oil. when the load is applied to the piston, the movement of piston and diaphragm arrangement will result from the increase in oil pressure which in turn produces the change in pressure.

Torque Measurement :-

Torque is just a rotational force or a force through a distance. It is represented as moment vector of force. Torque can be defined as a measure of the tendency of a force to rotate the body on which it acts about an axis.

$$P = T \times \omega$$

Torque measurement using strain gauge :-

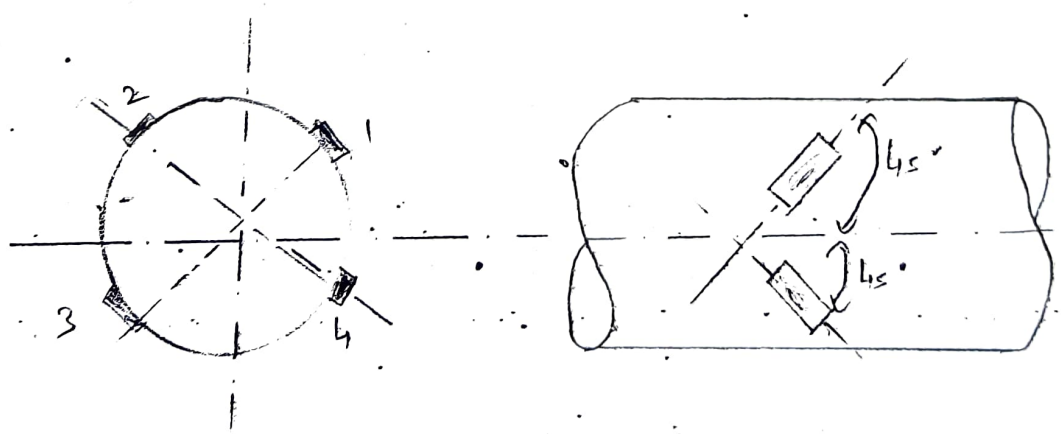

Strain gauge for shaft torque measurement

Torque transducer - based on strain measurement are normally made by applying strain gauges to a shaft to measure the shear strain caused by torsion.

The shear stress causes strains to appear at 45° to the longitudinal axis of the shaft. So the gauges must be precisely placed at 45° to the shaft axis shown in fig 5.24.

It is easier to measure bending strains due to torque at 45° and so an arrangement using beams may be employed in which the transmitted torque results in the bending of beams.

required to attempting to stop the engine.

Mechanical Dynamometers :-

They come under the absorption type.

There are two types of mechanical dynamometers.

a) prony brake.

b) Rope brake

a) prony brake :-

In prony brake, the mechanical energy is converted into heat through Dry friction between wooden brake shoe and fly wheel of the machine.

$$P = 2\pi N T / 60 = 2\pi N F L / 60$$

F = load applied

L = length of lever arm

N = speed of fly wheel (rpm)

Electrical type :-

Eddy current

Eddy current dynamometer require an electrically stator cone, shaft or disc moving across a magnetic field to produce resistance to movement.

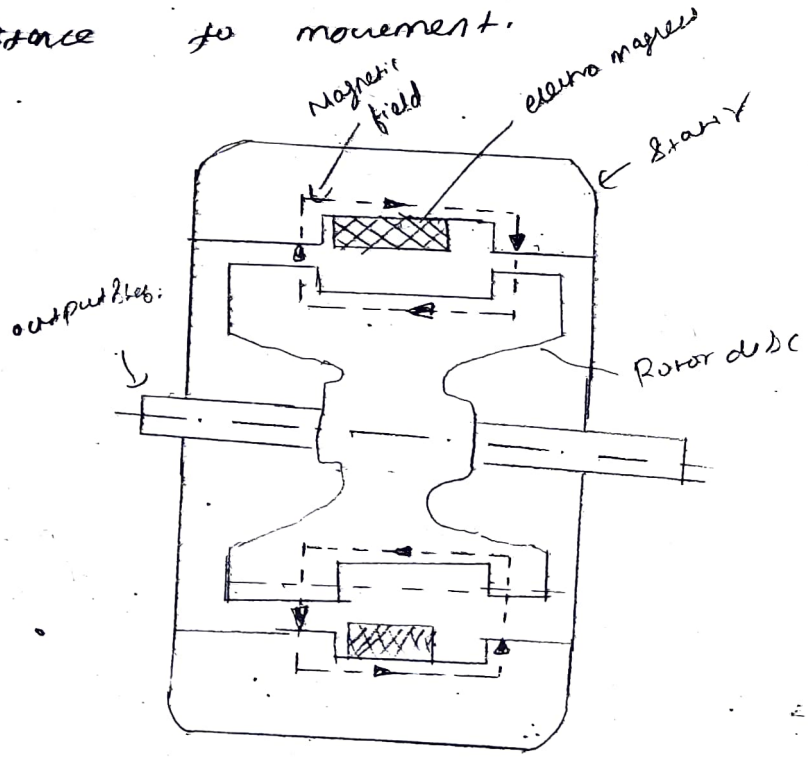

It consist of a stator on which a number of electromagnets is fitted. A rotor disc made of copper or steel is coupled to the output shaft of the engine in such a way. It can rotated in flux of magnetic field.

*) High brake power per unit weight of the dynamometer is obtained.

*) They offer the highest ratio of constant power speed range.

*) It produce relatively high torque.

Flow Measurement:-

Flow measurement is very important in industrial application and research work in the laboratory. Generally flow meters are used to measure the flow rate of fluid.

*) Mechanical flow meter.

*) Electrical flow meter.

Types of flow meter:-

*) Venturimeter.

*) Orifice meter

*) rotameter

*) pitot tube.

Orifice Meter:-

Orifice meter is the most common type of flow measuring device used for medium and large pipe sizes. When the orifice plate is placed in a pipe flow, the flow rate increases but pressure decreases.

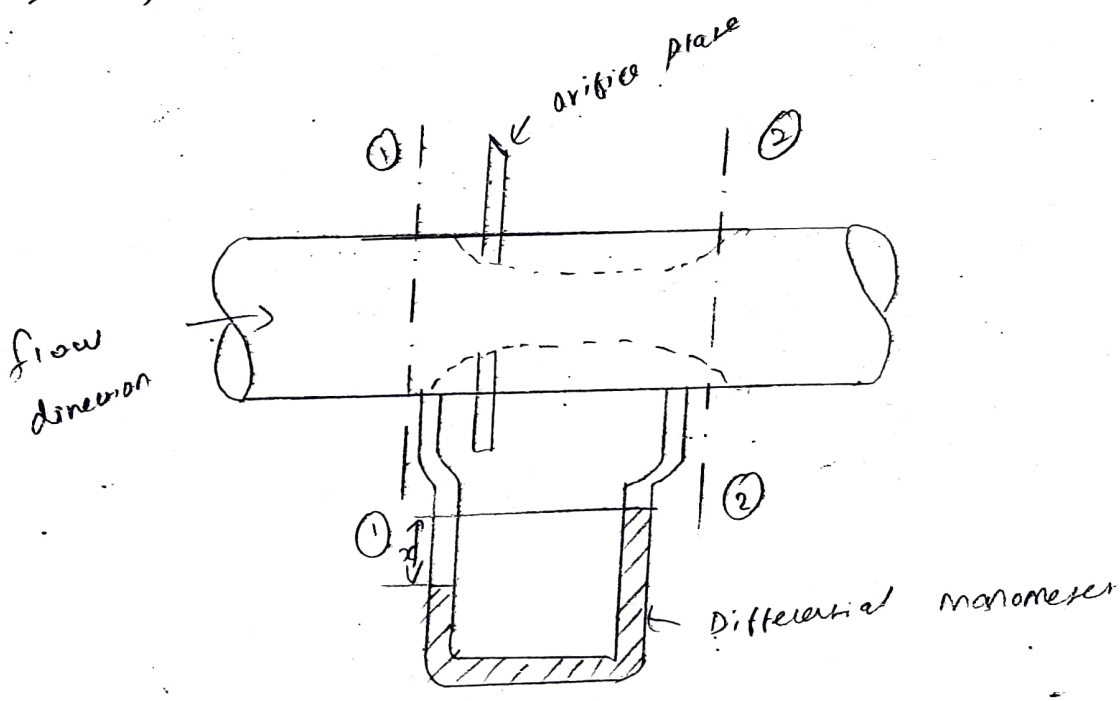

Orifia meter.

The point to which the velocity is maximum and the pressure is minimum is known as Vena-contracta. so the flow rate is maximum

Flow rate $Q = \dfrac{C_d \cdot a_1 \cdot a_0 \sqrt{2gh}}{\sqrt{a_1^2 - a_0^2}}$

a_1 - Area at section 1-1

a_0 - Area of orifice

C_d - Discharge coefficient.

Venturimeter :-

It is similar to an orifice meter. It has three distinct part, namely convergent cone, throat and divergent cone. A manometer measures the pressure difference between two section as shown in figure. Therefore the flow rate increases slowly from inlet to exit. But the flow is constant throughout the throat section due to uniform diameter of a throat.

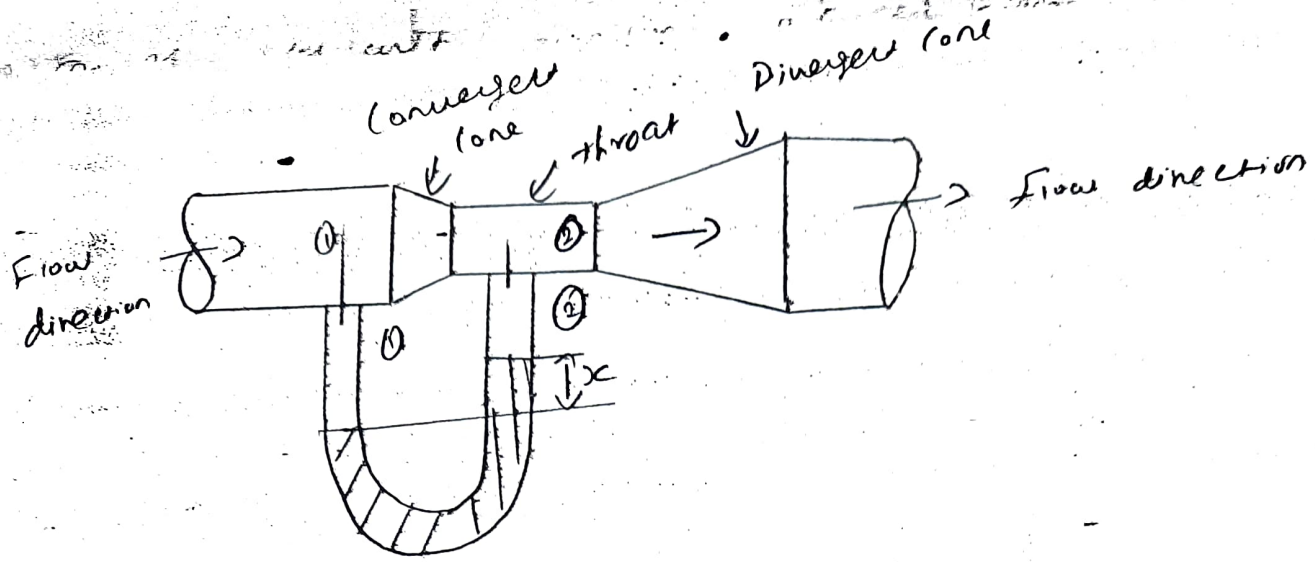

Venturimeter.

$$Q = \frac{C_d \cdot a_1 \cdot a_2 \sqrt{2gx}}{\sqrt{a_1^2 - a_2^2}}$$

a_1 - Area at the inlet section (1-1)

a_2 - Area at the throat section (2-2)

x - pressure head difference in manometer

C_d - Discharge coefficient.

Rotameter :-

A rotameter is a variable area type flow meter. Sometimes, rotameter is known as constant pressure drop meter; variable area or variable aperture meter.

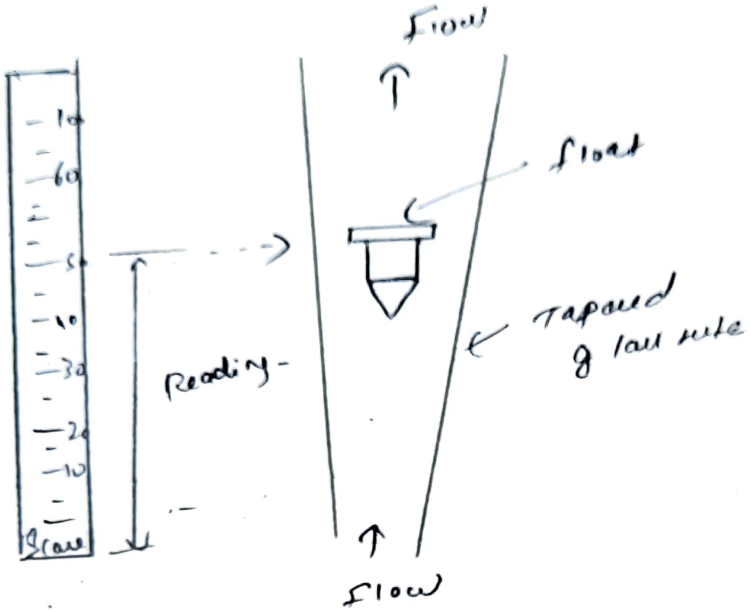

Rotameter.

The fluid flows from bottom to the tube when no fluid flows, the float will rest at the bottom of the tube. The float passage remains closed until the pressure of the flowing fluid puts the buoyancy effect exceeds the effect of gravity.

Pitot tube :-

"Transformation of the kinetic energy of a liquid into potential energy is in the form of a static head". For finding the discharge of a moving liquid, two quantities are required.

1) Mean velocity of flow

2) Area of cross section of flow.

A pitot tube is a simple device used for measuring the velocity of flow. The basic principle is that when a bent glass tube is inserted into the flowing water, water is raised into tube to a certain height due to the conversion of kinetic energy into pressure energy.

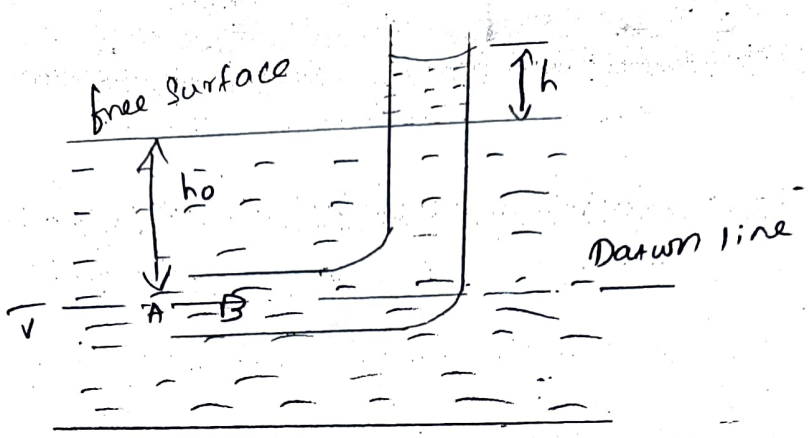

Pitot tube

- Velocity, $V = \sqrt{2gh}$ from which flow rate can be determined.

The actual velocity of flow can be obtained by introducing coefficient 'C' known pitot tube coefficient.

$$V = C\sqrt{2gh}$$

Temperature Measurement :-

Temperature is the most widely monitored parameter in science and industry. Temperature is defined as the average kinetic energy of individual molecules that comprise the system.

Bimetallic Strip:-

Bimetallic strip thermometers are mechanical thermometers. They are widely used in industry for temperature control because of their robustness, temperature range and simplicity.- Steel and copper or in some cases, brass is also used instead of copper for bimetallic strip.

Bimetallic Strip

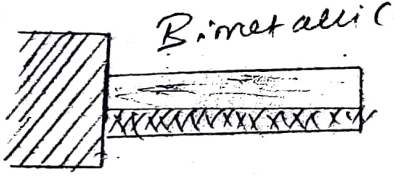

a) At normal temperature.

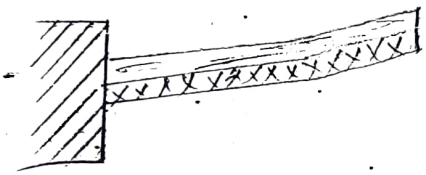

b) At elevated temperature.

Bimetallic Strip.

Thermo Couples :-

Thermocouples is device that converts thermal energy into electrical energy. Thermo couples are very simple and durable temperature sensors. Thermocouples used as a junction of dissimilar metals to generate a voltage proportional to temperature.

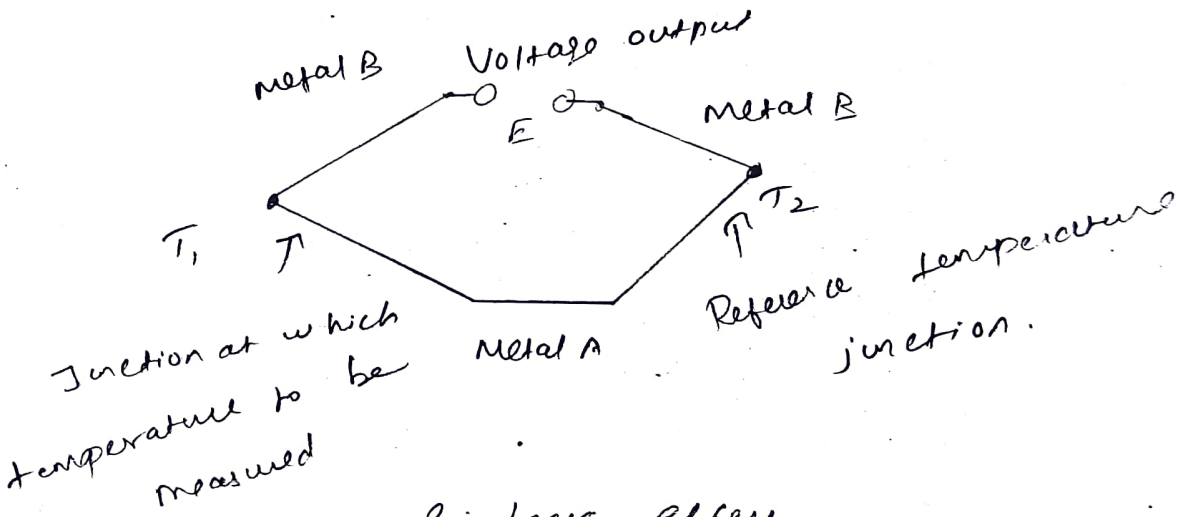

See basic effect

When two conducting dissimilar metals are joined together to form a loop and two unequal temperatures are interpoled at the junction, then an e.m.f will exist between two points. The generated e.m.f is primarily a function of the junction temperature. It is known as thermoelectric effect.

Reliability :-

A measurement is said to have a high reliability if it produce similar results under consistent conditions. "It is the characteristic of a set of the scores that relates to the amount of random error from the measurement process that might be embedded in the score.

Calibration :-

Calibration is the process of determining and adjusting an instrument's accuracy to make its accuracy is with in the manufacture specification. It is the process of determining the values of an quantity being measured.

Readability :-

Readability is defined as the closeness with which the scale of an analog instrument can be read for getting a better readability, the instruments scale should be as high as possible.

Electrical Resistance thermocouple :-

When a metal wire is heated, the resistance increase so as temperature can be measured by using with the resistance of a wire. Resistance thermocouple incorporates pure metals or ceramics always and increase the resistance as the temperature increase and it conducting electric the resistance as the temperature decrease.

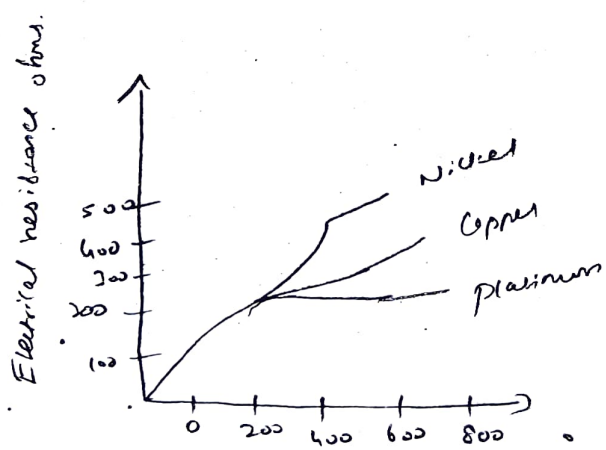

Temperature of the element (°c)

$$R = R_0(1+\alpha\Delta T)$$

R is the resistance at a temperature T°.

R_0 is the resistance at 0°c

α is the temperature coefficient.

Pneumatic load cell:

The cross sectional view of pneumatic load cell is shown in fig. The diaphragm of this type of load cell is made of flexible material. The load cell is designed to automatically regulate the balancing pressure. The pressure is supplied to one side of the diaphragm and its escaped through the nozzle placed at the bottom of the load cell. When the load is placed on the load cell the diaphragm will deflect. The deflection of diaphragm affects the flow through the nozzle as well as the pressure inside the chamber.

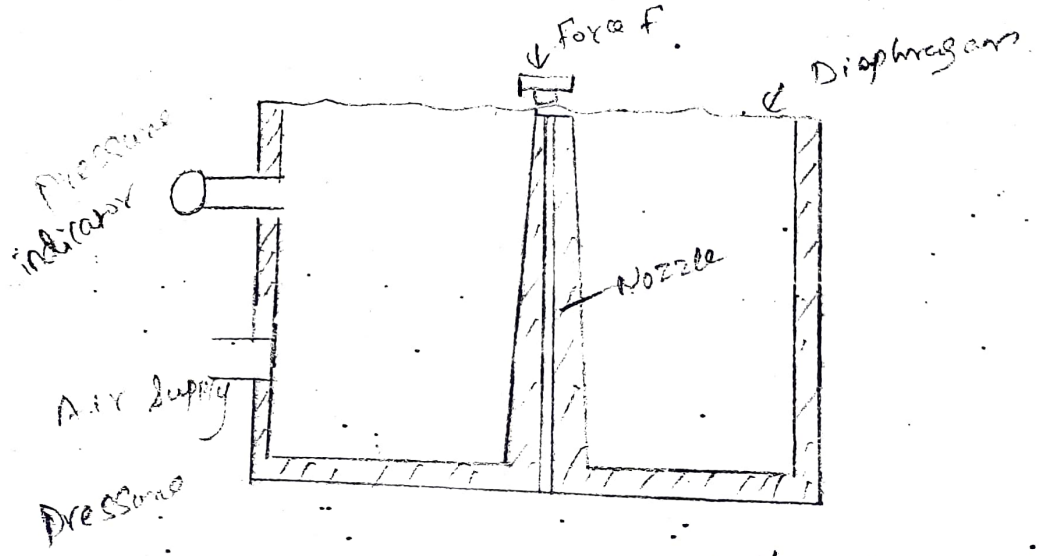

Pneumatic load cell